UNIVERSITAS
DIPONEGORO

BOOLEAN ALGEBRA

Part I

VTE2624203– Elektronika Digital

Dhani Nur Indra Syamputra, S.Si., M.Sc.

Describing Logic-Circuit

Describing Logic Circuit Algebraically

UNIVERSITAS DIPONEGORO

- Any logic circuit, **no matter how complex**, can be described completely using the three basic Boolean operations: AND, OR, NOT.
- Example:

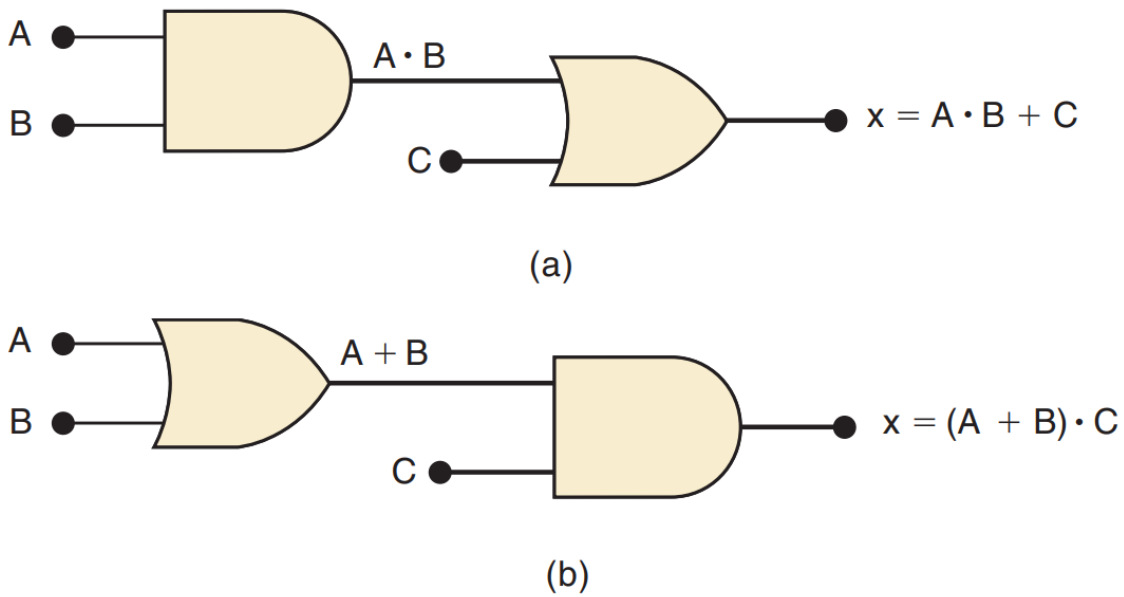

Operator Precedence

- There may be confusion about which operation in an expression is performed first.
- The expression $A \cdot B + C$ can be interpreted in two different ways:
  - (1) $A \cdot B$ is ORed with C, or
  - (2) A is ANDed with the term $B + C$
- If an expression contains both AND and OR operations, the AND operations are performed first, unless there are parentheses in the expression, in which case the operation inside the parentheses is to be performed first.

Circuits Containing INVERTERs

UNIVERSITAS DIPONEGORO

- Whenever an **INVERTER** is present in a logic-circuit diagram, its output expression is simply equal to the input expression with a bar over it.

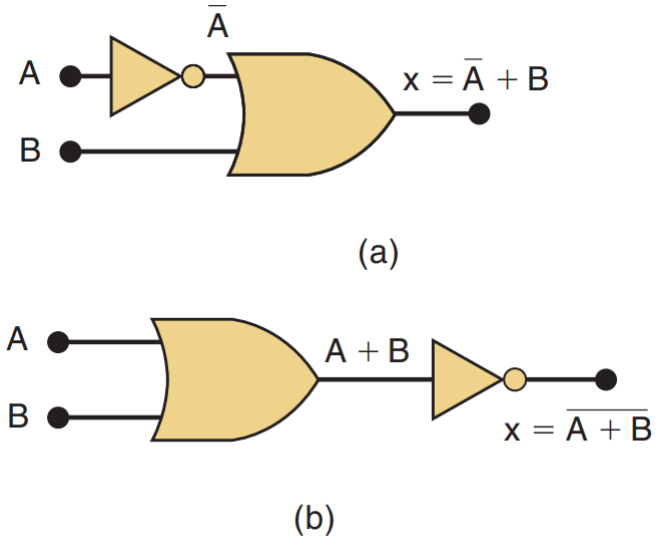

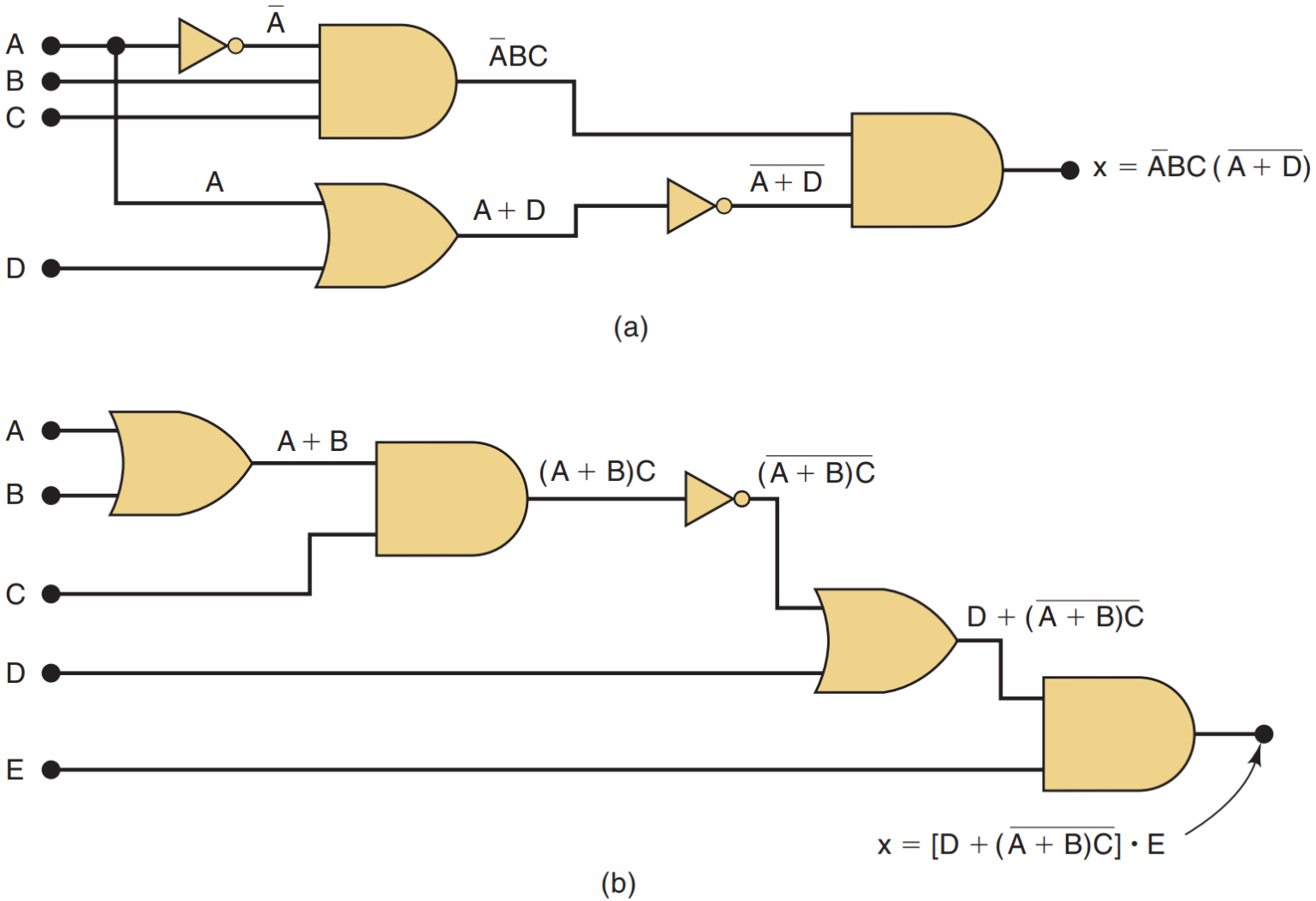

Evaluating Logic-Circuit Outputs

UNIVERSITAS DIPONEGORO

- Once we have the Boolean expression for a circuit output, we can obtain the output logic level for any set of input levels.
  - Once we have the Boolean expression for a circuit output, we can obtain the output logic level for any set of input levels.
- If $A = 0, B = 1, C = 1, D = 1$, As in ordinary algebra, the value of x can be found by "plugging" the values of the variables into the expression:

$$
\begin{aligned}
x &= \overline{A}BC(\overline{A + D}) \\
&= \overline{0} \cdot 1 \cdot 1 \cdot (\overline{0 + 1}) \\
&= 1 \cdot 1 \cdot 1 \cdot (\overline{0 + 1}) \\
&= 1 \cdot 1 \cdot 1 \cdot (\overline{1}) \\
&= 1 \cdot 1 \cdot 1 \cdot 0 \\
&= 0
\end{aligned}
$$

- In general, the following rules must always be followed when evaluating a Boolean expression:

First, perform all inversions of single terms; that is, $\overline{0} = 1$or $\overline{1} = 0$.

Then perform all operations within parentheses.

Perform an AND operation before an OR operation unless parentheses indicate otherwise.

If an expression has a bar over it, perform the operations inside the expression first and then invert the result.

Analysis using Table

UNIVERSITAS DIPONEGORO

- Whenever you have a circuit made up of multiple logic gates and you want to know how it works, the best way to analyze it is to use a truth table, because
  - It allows you to analyze one gate or logic combination at a time.
  - It allows you to easily double-check your work.
  - When you are done, you have a table that is of tremendous benefit in troubleshooting the logic circuit.

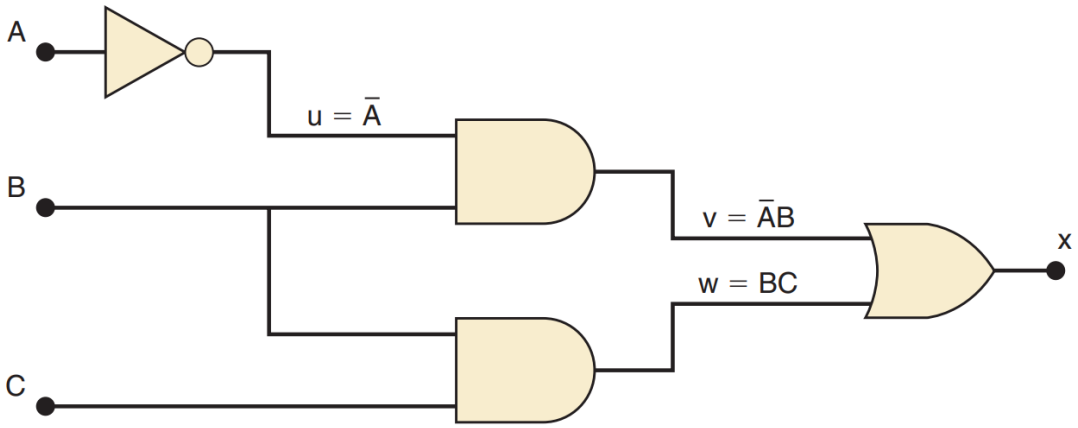

(a)

A	B	C	u= Ā	v= ĀB	w= BC	x= v+w
0	0	0	1			
0	0	1	1			
0	1	0	1			
0	1	1	1			
1	0	0	0			
1	0	1	0			
1	1	0	0			
1	1	1	0			

(b)

A	B	C	u= Ā	v= ĀB	w= BC	x= v+w
0	0	0	1	0		
0	0	1	1	0		
0	1	0	1	1		
0	1	1	1	1		
1	0	0	0	0		
1	0	1	0	0		
1	1	0	0	0		
1	1	1	0	0		

(c)

A	B	C	u= Ā	v= ĀB	w= BC	x= v+w
0	0	0	1	0	0	
0	0	1	1	0	0	
0	1	0	1	1	0	
0	1	1	1	1	1	
1	0	0	0	0	0	
1	0	1	0	0	0	
1	1	0	0	0	0	
1	1	1	0	0	1	

(d)

A	B	C	u= Ā	v= ĀB	w= BC	x= v+w
0	0	0	1	0	0	0
0	0	1	1	0	0	0
0	1	0	1	1	0	1
0	1	1	1	1	1	1
1	0	0	0	0	0	0
1	0	1	0	0	0	0
1	1	0	0	0	0	0
1	1	1	0	0	1	1

(e)

Implementing Circuit from Boolean Expr

UNIVERSITAS DIPONEGORO

- When the operation of a circuit is defined by a Boolean expression, we can draw a logic-circuit diagram directly from that expression.
- For example, if we needed a circuit that was defined by $x = A \cdot B \cdot C$, we would immediately know that all that was needed was a three-input AND gate.
- If we needed a circuit that was defined by $x = A + \overline{B}$, we would use a two-input OR gate with an INVERTER on one of the inputs.

Suppose that we wanted to construct a circuit whose output is $y = AC + B\overline{C} + \overline{A}BC$.

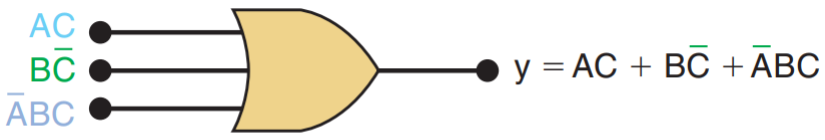

(a)

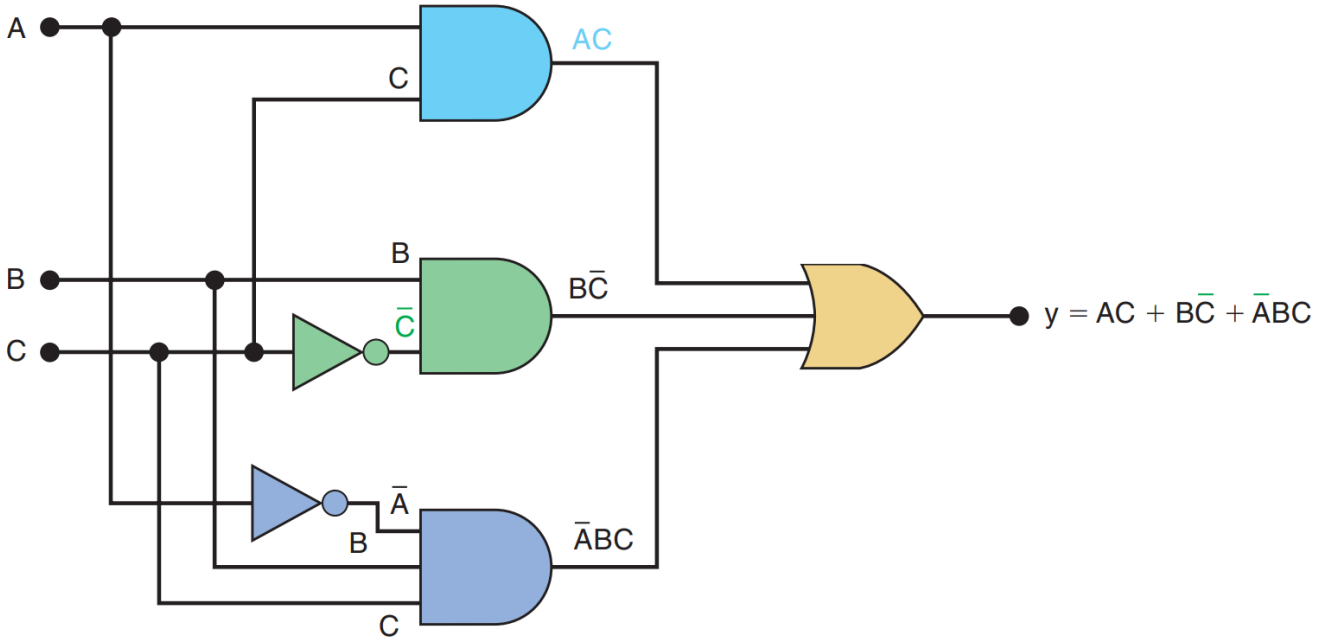

(b)

Boolean Theorem

Single and Multivariable Theorem

Boolean Expr: Equivalent & Complement

UNIVERSITAS DIPONEGORO

- Two given Boolean expressions are said to be ***equivalent*** if one of them equals '1' only when the other equals '1' and also one equals '0' only when the other equals '0'.
- They are said to be the ***complement*** of each other if one expression equals '1' only when the other equals '0', and vice versa.
- The complement of a given Boolean expression is obtained by complementing each literal, changing all '.' to '+' and all '+' to '.', all 0s to 1s and all 1s to 0s.
- Example:
  - Boolean Expression:

$$\bar{A} \cdot B + A \cdot \bar{B}$$

  - Corresponding Complement:

$$(A + \bar{B}) \cdot (\bar{A} + B)$$

  - Boolean Expression:

$$(A + B) \cdot (\bar{A} + \bar{B})$$

  - Corresponding Complement:

$$(\bar{A} \cdot \bar{B}) + (A \cdot B)$$

Duality Principle of Boolean Algebra

UNIVERSITAS DIPONEGORO

- The dual of a Boolean expression is obtained by replacing all '.' operations with '+' operations, all '+' operations with '.' operations, all 0s with 1s and all 1s with 0s and leaving all literals unchanged.
- Example:

$$\bar{A}B + A\bar{B} \Rightarrow (\bar{A} + B) \cdot (A + \bar{B})$$

$$(A + B) \cdot (\bar{A} + \bar{B}) \Rightarrow AB + \bar{A}\bar{B}$$

- Duals of Boolean expressions are mainly of interest in the study of Boolean postulates and theorems.
- Otherwise, there is no general relationship between the values of dual expressions. That is, both of them may equal '1' or '0'. One may even equal '1' while the other equals '0'.

This principle ensures that if a theorem is proved using postulates of Boolean algebra, then the dual of this theorem automatically holds and there is no requirement of proving it separately.

Postulates of Boolean Algebra

UNIVERSITAS DIPONEGORO

The following are the important postulates* of Boolean Algebra:

$1 \cdot 1 = 1,$	$0 + 0 = 0$
$1 \cdot 0 = 0 \cdot 1 = 0,$	$0 + 1 = 1 + 0 = 1$
$0 \cdot 0 = 0,$	$1 + 1 = 1$
$\bar{0} = 1,$	$\bar{1} = 0$

*A postulate is a statement that is assumed to be true without proof and is used as the basis for reasoning, discussion, or belief

Single-Variable Theorems

UNIVERSITAS DIPONEGORO

- **Theorem 1 (Operation with '0' and '1')**

$$\mathbf{0} \cdot X = \mathbf{0} \text{ and } \mathbf{1} + X = \mathbf{1}$$

- **Theorem 2 (Operation with '0' and '1')**

$$\mathbf{1} \cdot X = X \text{ and } \mathbf{0} + X = X$$

- **Theorem 3 (Idempotent or Identity Laws)**

$$X \cdot X \cdot \ldots \cdot X = X \text{ and } X + X + \cdots + X = X$$

- **Theorem 4 (Complementation Law)**

$$X \cdot \overline{X} = \mathbf{0} \text{ and } X + \overline{X} = \mathbf{1}$$

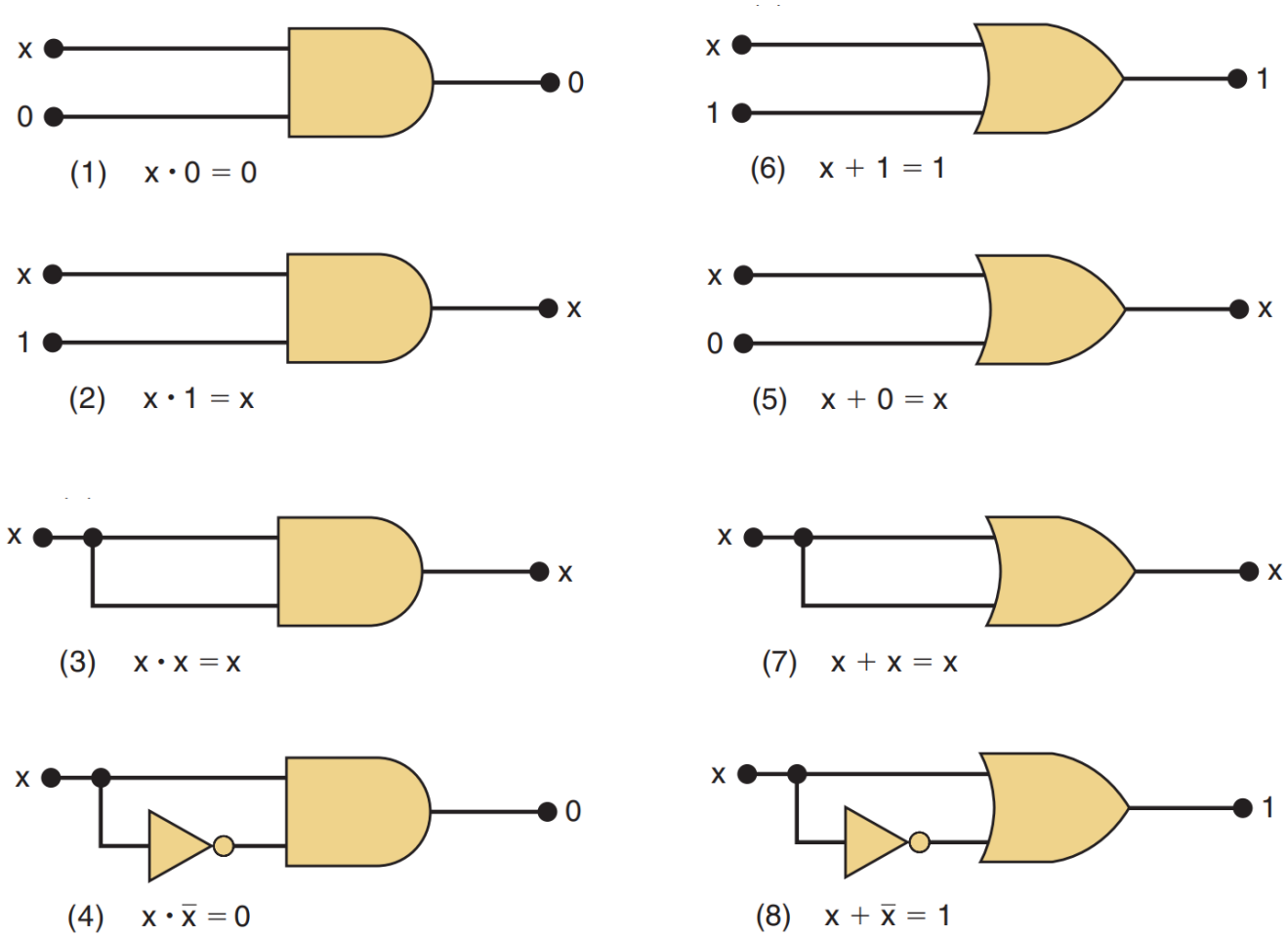

Multivariable Theorems

UNIVERSITAS DIPONEGORO

- **Theorem 5 (Commutative Law)**

$$X + Y = Y + X \text{ and } X \cdot Y = Y \cdot X$$

- **Theorem 6 (Associative Law)**

$$X + (Y + Z) = (X + Y) + Z \text{ and}$$
$$X \cdot (Y \cdot Z) = (X \cdot Y) \cdot Z$$

- **Theorem 7 (Distributive Law)**

$$X \cdot (Y + Z) = X \cdot Y + X \cdot Z \text{ and}$$
$$X + Y \cdot Z = (X + Y) \cdot (X + Z)$$

- **Theorem 8**

$$X \cdot Y + X \cdot \overline{Y} = X \text{ and}$$
$$(X + Y) \cdot (X + \overline{Y}) = X$$

Theorem 6 (Associative Law)

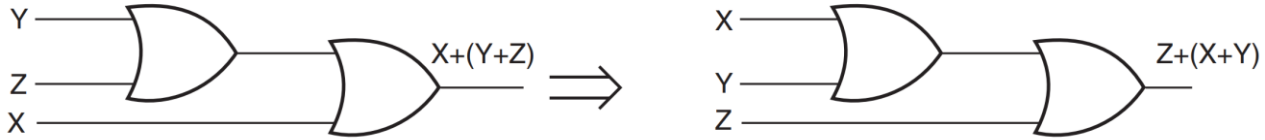

Theorem 7 (Distributive Law)

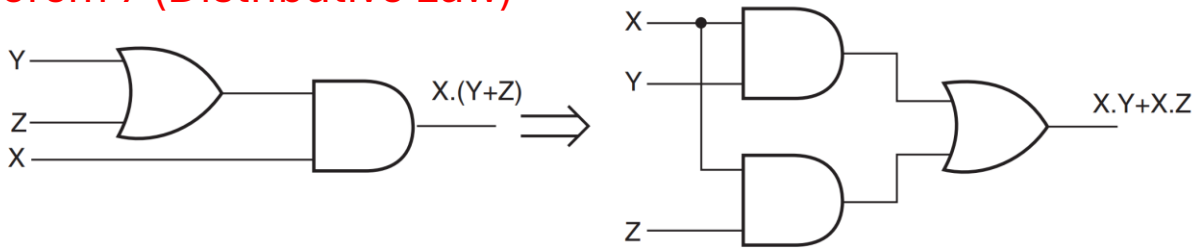

(a)

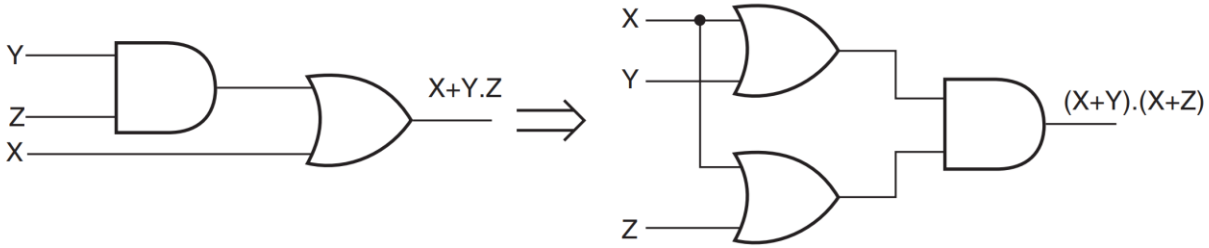

(b)

Multivariable Theorems

UNIVERSITAS DIPONEGORO

- **Theorem 9**

$$(X + \overline{Y}) \cdot Y = X \cdot Y \text{ and } X \cdot \overline{Y} + Y = X + Y$$

- **Theorem 10 (Absorption or Redudancy Law)**

$$X + X \cdot Y = X \text{ and } X \cdot (X + Y) = X$$

if a smaller term appears in a larger term, then the larger term is redundant

- **Theorem 11**

$$Z \cdot X + Z \cdot \overline{X} \cdot Y = Z \cdot X + Z \cdot Y \text{ and}$$
$$(Z + X) \cdot (Z + \overline{X} + Y) = (Z + X) \cdot (Z + Y)$$

When a smaller term appears in a larger term except for one of the variables appearing as a complement in the larger term, the complemented variable is redundant.

Multivariable Theorems

UNIVERSITAS DIPONEGORO

- **Theorem 12 (Consensus Theorem)**

$$X \cdot Y + \overline{X} \cdot Z + Y \cdot Z = X \cdot Y + \overline{X} \cdot Z \text{ and}$$
$$(X + Y) \cdot (\overline{X} + Z) \cdot (Y + Z) = (X + Y) \cdot (\overline{X} + Z)$$

If in a given Boolean expression we can identify two terms with one having a variable and the other having its complement, then the term that is formed by the product of the remaining variables in the two terms in the case of a sum-of-products expression or by the sum of the remaining variables in the case of a product-of-sums expression will be redundant.

- **Theorem 13 (DeMorgan's Theorem)**

$$\overline{(X_1 + X_2 + \cdots + X_n)} = \overline{X_1} \cdot \overline{X_2} \cdot \ldots \cdot \overline{X_n}$$
and
$$\overline{(X_1 \cdot X_2 \cdot \ldots \cdot X_n)} = \overline{X_1} + \overline{X_2} + \cdots + \overline{X_n}$$

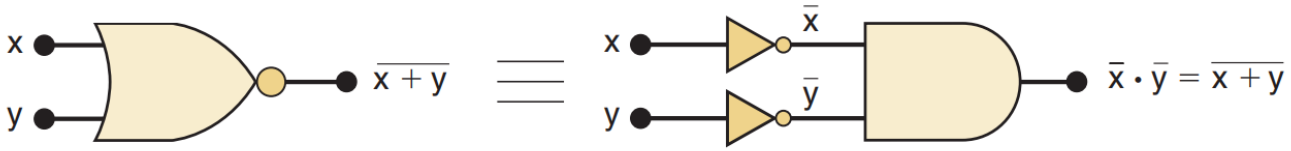

(a)

Multivariable Theorems

UNIVERSITAS DIPONEGORO

- **Theorem 14 (Transposition Theorem)**

$$\boldsymbol{X \cdot Y + \bar{X} \cdot Z = (X + Z) \cdot (\bar{X} + Y)} \text{ and } \boldsymbol{(X + Y) \cdot (\bar{X} + Z) = X \cdot Z + \bar{X} \cdot Y}$$

the first expression is the representation of a two-input EX-OR gate, while the second expression gives two forms of representation of a two input EX-NOR gate.

- **Theorem 15**

$$\boldsymbol{X \cdot f(X, \bar{X}, Y, Z, \ldots) = X \cdot f(1, 0, Y, Z, \ldots)} \text{ and } \boldsymbol{X + f(X, \bar{X}, Y, Z, \ldots) = X + f(0, 1, Y, Z, \ldots)}$$

if a variable X is multiplied by an expression containing X and $\bar{X}$ in addition to other variables, then all Xs and $\bar{X}$s can be replaced with 1s and 0s respectively.

Multivariable Theorems

UNIVERSITAS DIPONEGORO

- **Theorem 16 (Shannon's Expansion Theorem)**

$$f(X, \overline{X}, Y, \dots, Z) = X \cdot f(1, 0, Y, \dots, Z) + \overline{X} \cdot f(0, 1, Y, \dots, Z)$$

and

$$f(X, \overline{X}, Y, \dots, Z) = [X + f(0, 1, Y, \dots, Z)][\overline{X} + f(1, 0, Y, \dots, Z)]$$

an identity which allow the expansion of any logic function to broken down in parts.

- **Theorem 17 (Involution Law)**

$$\overline{\overline{X}} = X$$

the complement of the complement of an expression leaves the expression unchanged.

Boolean Algebra Part II: Simplifying Logic Circuit

Next meeting …